REV.	ECN NO.	DATE	SIGN	DESCRIPTION
B	LENI750599	2017/05/25	Ruru	Change Logo

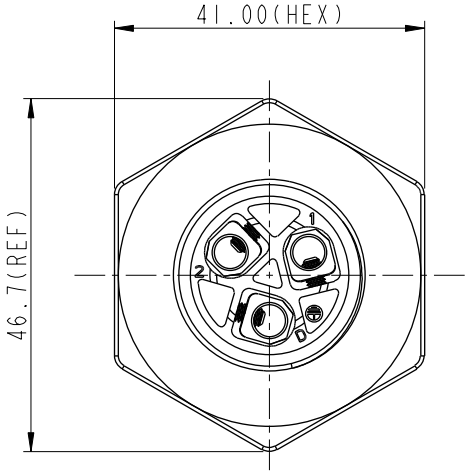

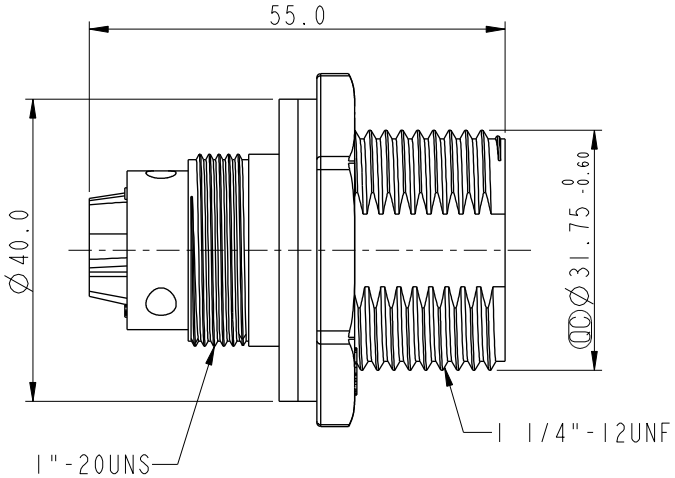

Pin Assignments
Front View

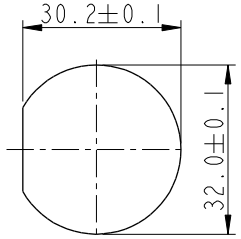

Recommended
Panel Cut-Out

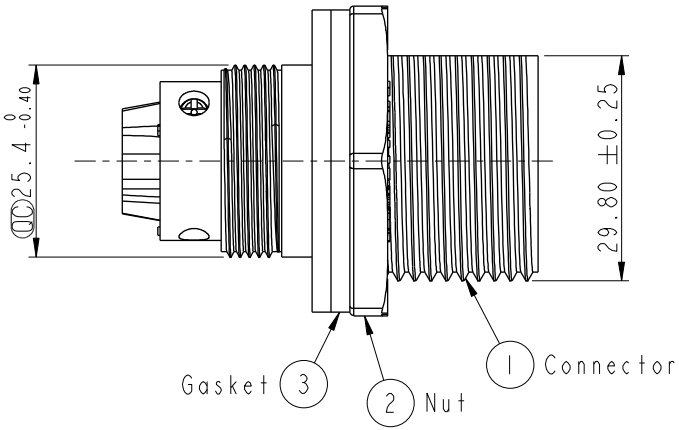

ALTW DCC. DEPT. CONFIDENTIAL 2017.06.01 ISSUED

ALTW CONFIDENTIAL 2017-05-25 R&D DEPT.

Note:
* QC Important Dimension To Check.
* Waterproof Rate: IP67.
* Housing: Nylon+GF, Black.
* Male Pin: Copper Alloy, Gold Plated.
* Gasket: EPDM, Black.
* Nut: Nylon+GF, Black.
* Screw: M2.5*0.45 圓頭螺絲
* Panel Thickness Max: 5mm.

UNIT: mm	TITLE: Power, Panel Screw 3P M Conn M Pin	Amphenol LTW 安費諾亮泰企業股份有限公司	ITEM NO: PWH-03PMMB-SC7001	DRAWN BY: Ruru	DATE: 2017-05-25
TOLERANCE: ± 0.5mm	SCALE: 1:1 / SIZE: A4 / SHEET: 1 OF 1		DWG NO: PWH-03PMMB-SC7001	CHECKED BY: Rita	DATE: 2017-05-25
	REV.: B / WC-REV.: A.2	QC: Inspection item	CUSTOMER: ALTW	APPROVED BY: Max	DATE: 2017-05-25

THIS DOCUMENT IS SUBJECT TO CHANGE WITHOUT NOTICE. IT IS CONFIDENTIAL AND A PROPERTY OF Amphenol LTW. DISCLOSURE TO THIRD PARTY HAS TO BE AUTHORIZED BY Amphenol LTW.