REV.	ECN NO.	DATE	SIGN	DESCRIPTION

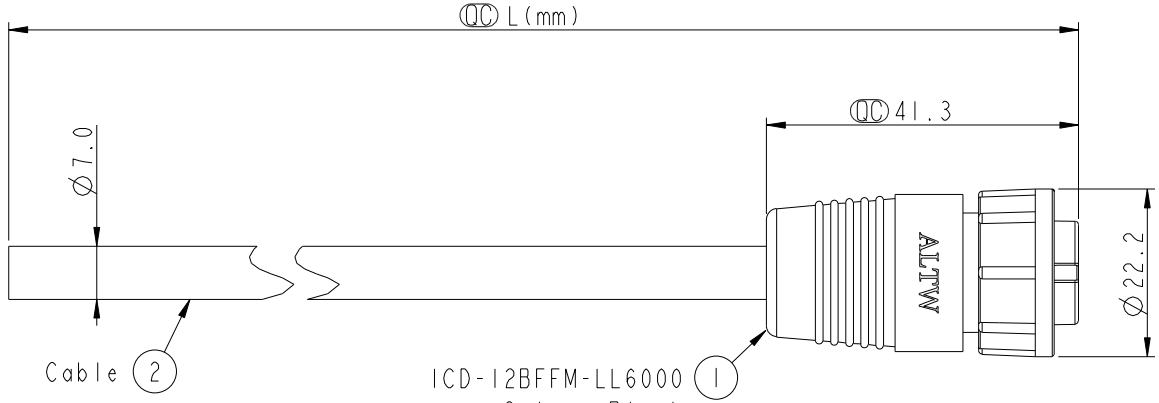

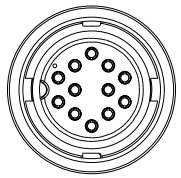

Conn.

ALTW DCC. DEPT. CONFIDENTIAL 2014.01.13 ISSUED

ALTW CONFIDENTIAL 2014-01-11 R&D DEPT.

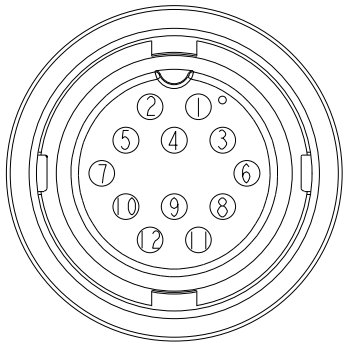

Pin Assignments
Front View

Conn.	Wire Color	
12	Light Green	淺綠
11	Purple	紫
10	Orange	橙
9	Black	黑
8	Red	紅
7	Pink	粉紅
6	Gary	灰
5	Yellow	黃
4	Green	綠
3	White	白
2	Blue	藍
1	Brown	棕

Pin Out

ICD-12BFFM-LL6AXX

XX :01~99Meters
01 :01Meter
02 :02Meters
:
:
99 :99Meters

Cable Length(L):01~99Meters

Note:
* QC Important Dimension To Check.
* Waterproof Rate: IP66
* Housing: Nylon+GF, Black.
* Female Pin: Copper Alloy, Gold Plated.
* Lock Nut: Nylon+GF, Black.
* O-Ring: Silicon, Gray
* Cable: UL2464 24AWG*12C+Drain+Al/My PVC Jacket UV Resistant, OD=7.0, Black.
* Cable Length Tolerance: 01M:40mm
  02M~05M:±60mm
  06M~10M:±100mm
  11M~30M:±200mm
  31M~99M:±500mm

UNIT:mm

TOLERANCE ±0.5

TITLE: MIDDLE CNC PIN CABLE LOCK 12P F CONN F PIN

SCALE 1:1 | SIZE A4 | SHEET 1 OF 1

REV. A | WC-REV. A.2 | QC:Inspection item

Amphenol LTW
安費諾亮泰企業股份有限公司

ITEM NO	DRAWN BY Jiazhen_li	DATE 2014-01-11
DWG NO ICD-12BFFM-LL6AXX	CHECKED BY Ruru	DATE 2014-01-11
CUSTOMER ALTW	APPROVED BY Jerry	DATE 2014-01-11

FMW10702-01-02A1

THIS DOCUMENT IS SUBJECT TO CHANGE WITHOUT NOTICE. IT IS CONFIDENTIAL AND A PROPERTY OF Amphenol LTW. DISCLOSURE TO THIRD PARTY HAS TO BE AUTHORIZED BY Amphenol LTW.