REV.	ECN NO.	DATE	SIGN	DESCRIPTION
C	C201578	2020/10/16	Ruru	C X4
D	C210542	2021/04/07	Ruru	D X2
E	C221874	2022/12/05	Ruru	E X1

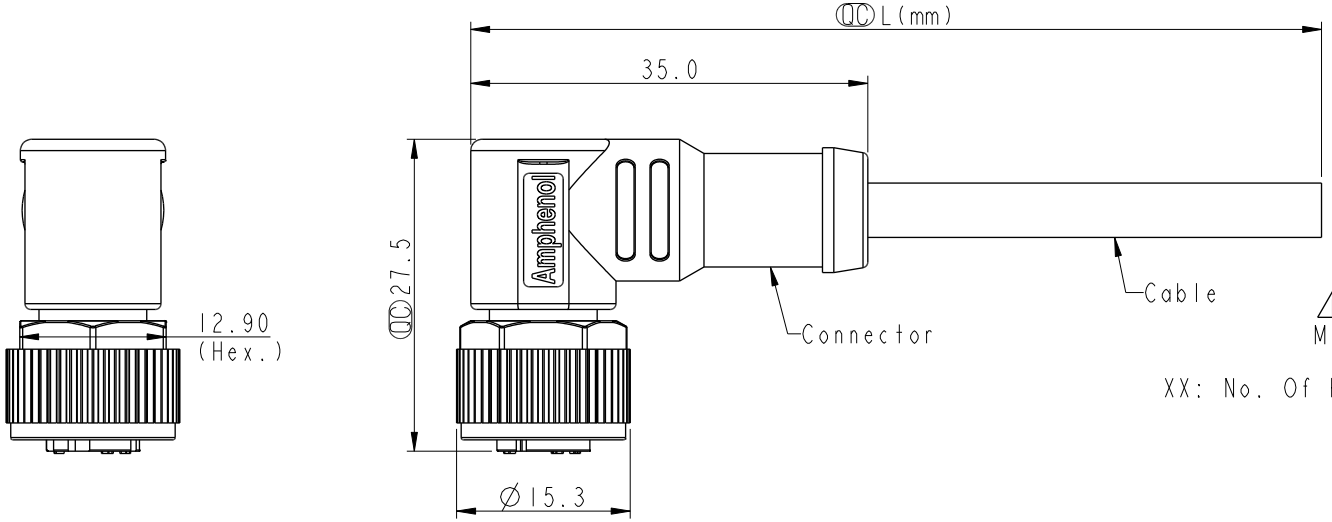

B C
M12D-XXBFFM-SR8EXX

XX: No. Of Pin

XX:01~99Meters
01:01Meter
02:02Meters
:
99:99Meters

B C

Pin Out	4 Green 綠		
	2 White/Green 白/綠	Twist	
	3 Orange 橙		
	1 White/Orange 白/橙	Twist	
	Pin # Wire (Cat5e)		
Conn.	4P		

Pin Assignments Front View

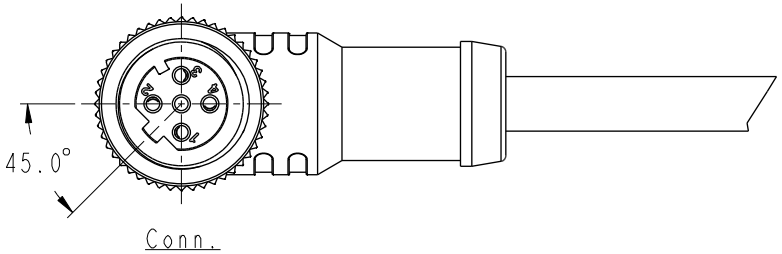

Note: C D
* RoHS Compliant
* QC Important dimension
E * Waterproof rate: IP68, mated 1m/24h
IP69K, mated
* Connector
Housing: Thermoplastic, Black
Pin: Copper alloy, Gold plated
O-Ring: Rubber, Green
Nut: Metal
Outer mold: Thermoplastic, Black
* Cable: CAT-5E, 22#*2P+AL/MY+D, OD=6.2,
PU Jacket, Black
* Cable length tolerance: 1M: +50/-0 mm
1M < L ≦ 3M: +100/-0 mm
3M < L ≦ 5M: +150/-0 mm
5M < L ≦ 10M: ±100 mm
10M < L ≦ 20M: ±200 mm
20M < L ≦ 30M: ±300 mm
30M < L ≦ 99M: ±500 mm

UNIT: mm

TOLERANCE ±0.5mm

TITLE	N SEN, M12 D, SCREW CABLE W/O SR, F, F, MOLDING D		
SCALE 3:2	SIZE A4	SHEET 1 OF 1	
REV. E	WC-REV. A.3	QC: Inspection item	

Amphenol LTW
安費諾亮泰企業股份有限公司

ITEM NO	DRAWN BY Yulong_wang	DATE 2016-10-14
DWG NO C M12D-XXBFFM-SR8EXX	CHECKED BY Jinhai	DATE 2016-10-14
CUSTOMER ALTW	APPROVED BY Jerry	DATE 2016-10-14

W10814-03-RW01A2

THIS DOCUMENT IS SUBJECT TO CHANGE WITHOUT NOTICE. IT IS CONFIDENTIAL AND A PROPERTY OF Amphenol LTW. DISCLOSURE TO THIRD PARTY HAS TO BE AUTHORIZED BY Amphenol LTW.