REV.	ECN NO.	DATE	SIGN	DESCRIPTION
B	C201786	2020/11/17	Ruru	B X3
C	C210237	2021/03/26	Ruru	C X2
D	C230014	2022/12/30	Ruru	D X2

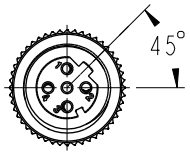

C1

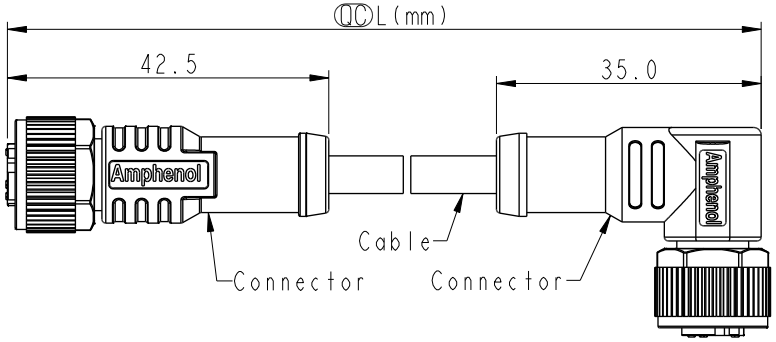

B
MSDPXXFL-SDPFR-SDXXX

XX: No. Of Pin

XXX: 0.5~99Meters
A05: 0.5 Meter
1: 01 Meter
2: 02 Meters
:
99: 99 Meters

Pin Out	5 --		
	4	Black	黑
	3	Blue	藍
	2	White	白
	1	Brown	棕
	Pin #	Wire	

C2

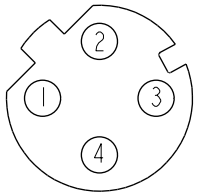

4P

C1

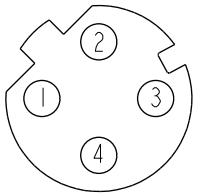

4P

Pin Assignments Front View

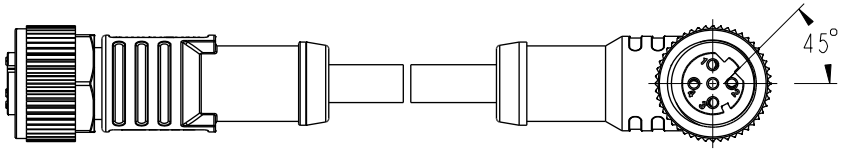

C2

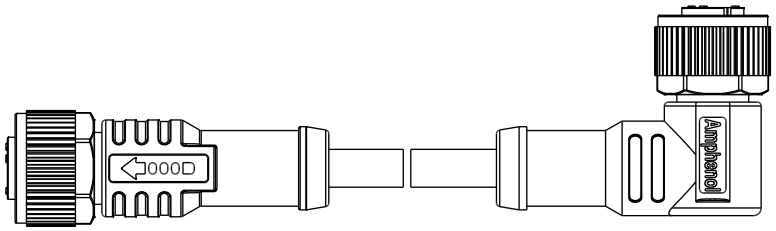

Note: B C
* RoHS Compliant
* QC Important dimension
* C1
D Waterproof rate: IP68, mated 1m/24h
IP69K, mated
Housing: Thermoplastic, Black
Pin: Copper alloy, Gold plated
O-Ring: Rubber, Green
Nut: Thermoplastic, Black
Outer mold: Thermoplastic, Black
* C2
D Waterproof rate: IP68, mated 1m/24h
IP69K, mated
Housing: Thermoplastic, Black
Pin: Copper alloy, Gold plated
O-Ring: Rubber, Green
Nut: Thermoplastic, Black
Outer mold: Thermoplastic, Black
* Cable: UL2517, 22#4C, OD=4.8mm, PVC Jacket, Black
* Cable length tolerance: 0.5M < L ≦ 1M: +60/-0 mm
1M < L ≦ 3M: +120/-0 mm
3M < L ≦ 5M: +160/-0 mm
5M < L ≦ 10M: ±100 mm
10M < L ≦ 20M: ±200 mm
20M < L ≦ 30M: ±300 mm
30M < L ≦ 99M: ±500 mm

UNIT: mm

TOLERANCE
±0.5 mm

TITLE: ACC, SEN, D Code, DB-ENDED FF C

SCALE: 1:2 | SIZE: A4 | SHEET 1 OF 1

REV. D | WC-REV.

QC: Inspection item

Amphenol LTW
安費諾亮泰企業股份有限公司

ITEM NO	DRAWN BY: Vicky	DATE: 2018-12-12
DWG NO: B MSDPXXFL-SDPFR-SDXXX	CHECKED BY: Rita	DATE: 2018-12-12
CUSTOMER: ALTW	APPROVED BY: Max	DATE: 2018-12-12

THIS DOCUMENT IS SUBJECT TO CHANGE WITHOUT NOTICE. IT IS CONFIDENTIAL AND A PROPERTY OF Amphenol LTW. DISCLOSURE TO THIRD PARTY HAS TO BE AUTHORIZED BY Amphenol LTW.