REV.	ECN NO.	DATE	SIGN	DESCRIPTION
B	C191730	2019/10/08	Vicky	Update Code & Wire Tolerance

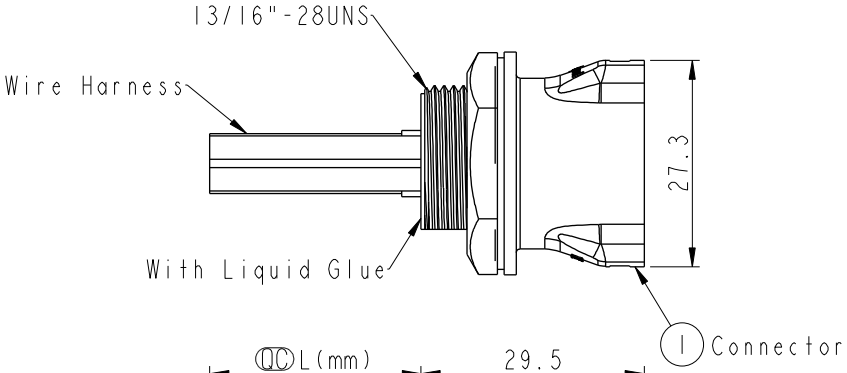

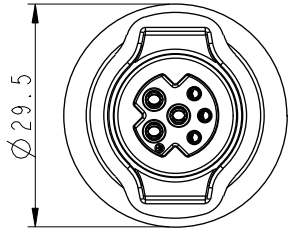

Conn.

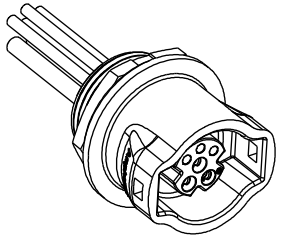

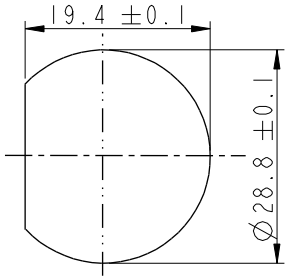

Recommended Panel Cut-out

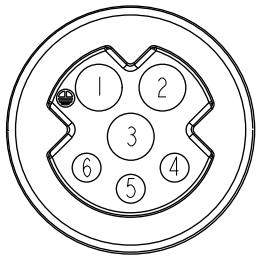

Conn. Pin Assignments Front View

Conn.	Wire Color	
6	Black (20AWG)	黑
5	White (20AWG)	白
4	Green (20AWG)	綠
3	Bule (16AWG)	藍
2	Red (16AWG)	紅
1	Black (16AWG)	黑

Pin Out

CBD-06RFFC-RC8CXX

- 10 : 100mm
- 15 : 150mm
- 20 : 200mm
- ∫
- B A0 : 1000mm

Cable Pitch Unit: 50mm
Wire Length(L): 100~1000mm

ALTW
CONFIDENTIAL
2019-10-08
R&D DEPT.

Note:
* QC Important Dimension To Check.
* Waterproof Rate: IP68
* Connector: M-PPE, Black.
* Female Pin: Copper Alloy, Gold Plated.
* Gasket: Silicone, Gray.
* Nut: Nylon+GF, Black.
* Wire Harnss: UL1015
* Panel Thickness Max: 5.0mm
* Recommended Nut Torque: 8~10 kgf.cm
* B Wire Harness Tolarance: 100 ±10mm
  101~300mm ±15mm
  301~1000mm ±20mm
* Prohibiting the use of place in oils

UNIT: mm	TITLE: MIDDLE PANEL RBL F CONN F PIN	Amphenol LTW 安費諾亮泰企業股份有限公司	ITEM NO
TOLERANCE ±0.5mm	SCALE 1:1 / SIZE A4 / SHEET 1 OF 1		DWG NO CBD-06RFFC-RC8CXX
	REV. B / WC-REV. .0 / QC: Inspection item		CUSTOMER ALTW

DRAWN BY Peng	DATE 2019-05-10	
CHECKED BY Mafei	DATE 2019-05-10	
APPROVED BY Jerry	DATE 2019-05-10	

W10814-03-RM01A2

THIS DOCUMENT IS SUBJECT TO CHANGE WITHOUT NOTICE. IT IS CONFIDENTIAL AND A PROPERTY OF Amphenol LTW. DISCLOSURE TO THIRD PARTY HAS TO BE AUTHORIZED BY Amphenol LTW.