REV.	ECN NO.	DATE	SIGN	DESCRIPTION
C	C210081	2021/01/19	Vicky	C X2
D	C210550	2021/04/07	Vicky	D X4
E	C230002	2023/01/03	Vicky	E X2

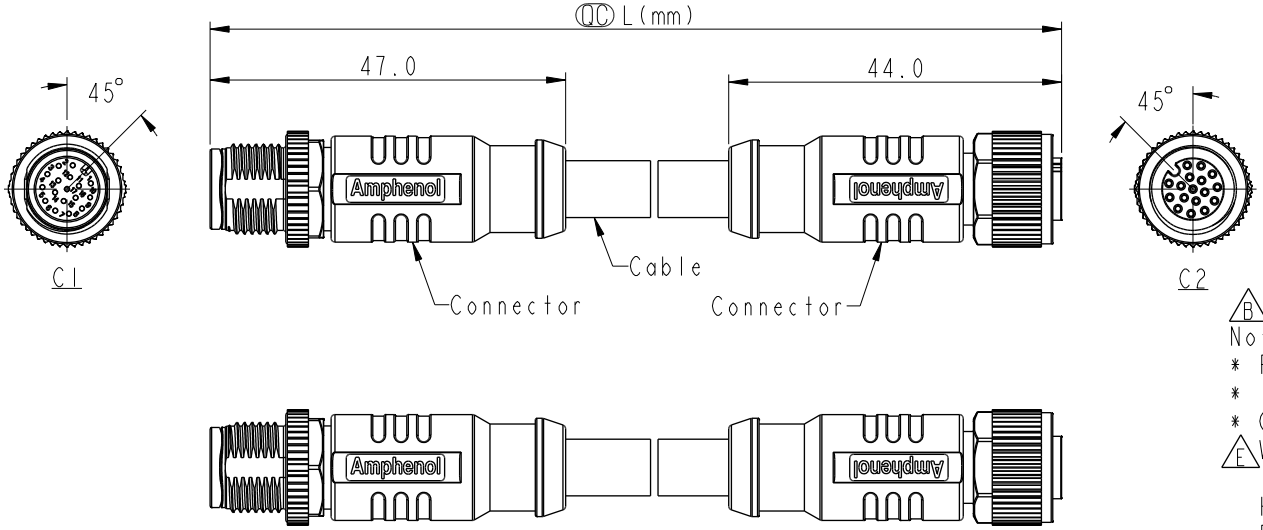

B D
Note:
* RoHS Compliant
* QC Important dimension
* C1
E Waterproof rate: IP68, mated 1m/24h
IP69K, mated
Housing: Thermoplastic, Black
Pin: Copper alloy, Gold plated
C Nut: Metal
Shield: Metal
Outer Mold: Thermoplastic, Black
* C2
E Waterproof rate: IP68, mated 1m/24h
IP69K, mated
Housing: Thermoplastic, Black
Pin: Copper alloy, Gold plated
O-Ring: Rubber, Gray
C Nut: Metal
Shield: Metal
Outer Mold: Thermoplastic, Black
* Cable: UL20549, Shield, PUR Jacket, Black
* Cable Length Tolerance: 0.5M < L ≤ 1M: +60/-0 mm
1M < L ≤ 3M: +120/-0 mm
3M < L ≤ 5M: +160/-0 mm
5M < L ≤ 10M: ±100 mm
10M < L ≤ 20M: ±200 mm
20M < L ≤ 30M: ±300 mm
30M < L ≤ 99M: ±500 mm

UNIT: mm	TITLE: ACC, SEN, A Code, DB-ENDED MF D	Amphenol LTW 安費諾亮泰企業股份有限公司	ITEM NO	DRAWN BY: Brady	DATE: 2019-01-23
TOLERANCE: ±0.5mm	SCALE: 1:2 / SIZE: A4 / SHEET 1 OF 2		DWG NO: B MSASXXML-SASFL-SBXXX	CHECKED BY: Eagle	DATE: 2019-01-23
	REV. E / WC-REV. A.5	QC: Inspection item	CUSTOMER: ALTW	APPROVED BY: Neo	DATE: 2019-01-23

THIS DOCUMENT IS SUBJECT TO CHANGE WITHOUT NOTICE. IT IS CONFIDENTIAL AND A PROPERTY OF Amphenol LTW. DISCLOSURE TO THIRD PARTY HAS TO BE AUTHORIZED BY Amphenol LTW.

B MSASXXML-SASFL-SBXXX

XX: No. Of Pin

XXX: 0.5~99Meters
A05: 0.5 Meter
001: 1 Meter
002: 2 Meters
:
099: 99 Meters

Contacts	Cable OD	AWG	Item No.
17P	7.5	26	MSAS17ML-SASFL-SBXXX
12P	6.4		MSAS12ML-SASFL-SBXXX
8P	5.8	24	MSAS08ML-SASFL-SBXXX
5P	5.7	22	MSAS05ML-SASFL-SBXXX
4P	5.3		MSAS04ML-SASFL-SBXXX

Pin Out

Pin #	Wire
Shield	Braid
5	--
4	Black 黑
3	Blue 藍
2	--
1	Brown 棕

Pin #	Wire
Shield	Braid
5	--
4	Black 黑
3	Blue 藍
2	White 白
1	Brown 棕

Pin #	Wire
Shield	Braid
5	Gray 灰
4	Black 黑
3	Blue 藍
2	White 白
1	Brown 棕

Pin #	Wire
Shield	Braid
8	--
7	Blue 藍
6	Pink 粉
5	--
4	Yellow 黃
3	Green 綠
2	Brown 棕
1	White 白

Pin #	Wire
Shield	Braid
8	Red 紅
7	Blue 藍
6	Pink 粉
5	Gray 灰
4	Yellow 黃
3	Green 綠
2	Brown 棕
1	White 白

Pin #	Wire
Shield	Braid
12	--
11	--
10	Violet 紫
9	Black 黑
8	Red 紅
7	Blue 藍
6	Pink 粉
5	Gray 灰
4	Yellow 黃
3	Green 綠
2	Brown 棕
1	White 白

Pin #	Wire
Shield	Braid
12	Red/Blue 紅/藍
11	Gray/Pink 灰/粉
10	Violet 紫
9	Black 黑
8	Red 紅
7	Blue 藍
6	Pink 粉
5	Gray 灰
4	Yellow 黃
3	Green 綠
2	Brown 棕
1	White 白

Pin #	Wire
Shield	Braid
17	White/Gray 白/灰
16	Yellow/Brown 黃/棕
15	White/Yellow 白/黃
14	Brown/Green 棕/綠
13	White/Green 白/綠
12	Red/Blue 紅/藍
11	Gray/Pink 灰/粉
10	Violet 紫
9	Red 紅
8	Gray 灰
7	Black 黑
6	Yellow 黃
5	Pink 粉
4	Green 綠
3	White 白
2	Blue 藍
1	Brown 棕

C2

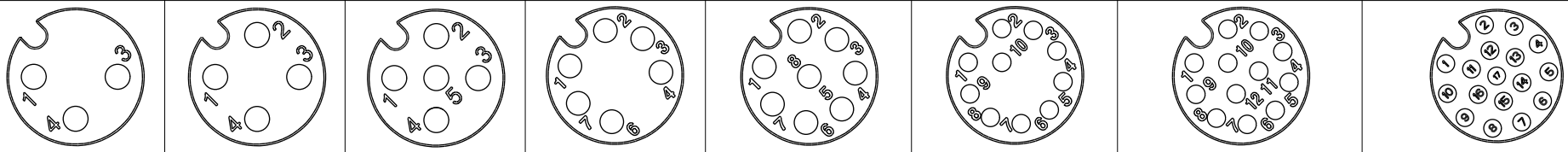

3P 4P 5P 6P 8P 10P 12P 17P

C1

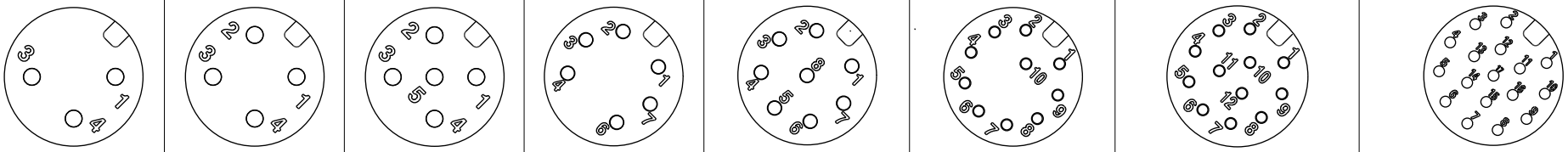

3P 4P 5P 6P 8P 10P 12P 17P

Pin Assignments Front View

UNIT: mm

TOLERANCE ±0.5mm

TITLE: ACC, SEN, A Code, DB-ENDED MF (D)

SCALE 1:2 | SIZE A4 | SHEET 2 OF 2

REV. E | WC-REV. A.5 | QC: Inspection item

Amphenol LTW
安費諾亮泰企業股份有限公司

ITEM NO

DWG NO (B) MSASXXML-SASFL-SBXXX

CUSTOMER ALTW

DRAWN BY Brady | DATE 2019-01-23

CHECKED BY Eagle | DATE 2019-01-23

APPROVED BY Neo | DATE 2019-01-23

W10814-03-RW01A2

THIS DOCUMENT IS SUBJECT TO CHANGE WITHOUT NOTICE. IT IS CONFIDENTIAL AND A PROPERTY OF Amphenol LTW. DISCLOSURE TO THIRD PARTY HAS TO BE AUTHORIZED BY Amphenol LTW.