REV.	ECN NO.	DATE	SIGN	DESCRIPTION
C	C201021	2020/07/09	Wesley Lin	C *1
D	C202019	2020/12/21	Wesley Lin	D *1
E	C230765	2023/08/10	Alex	E *2

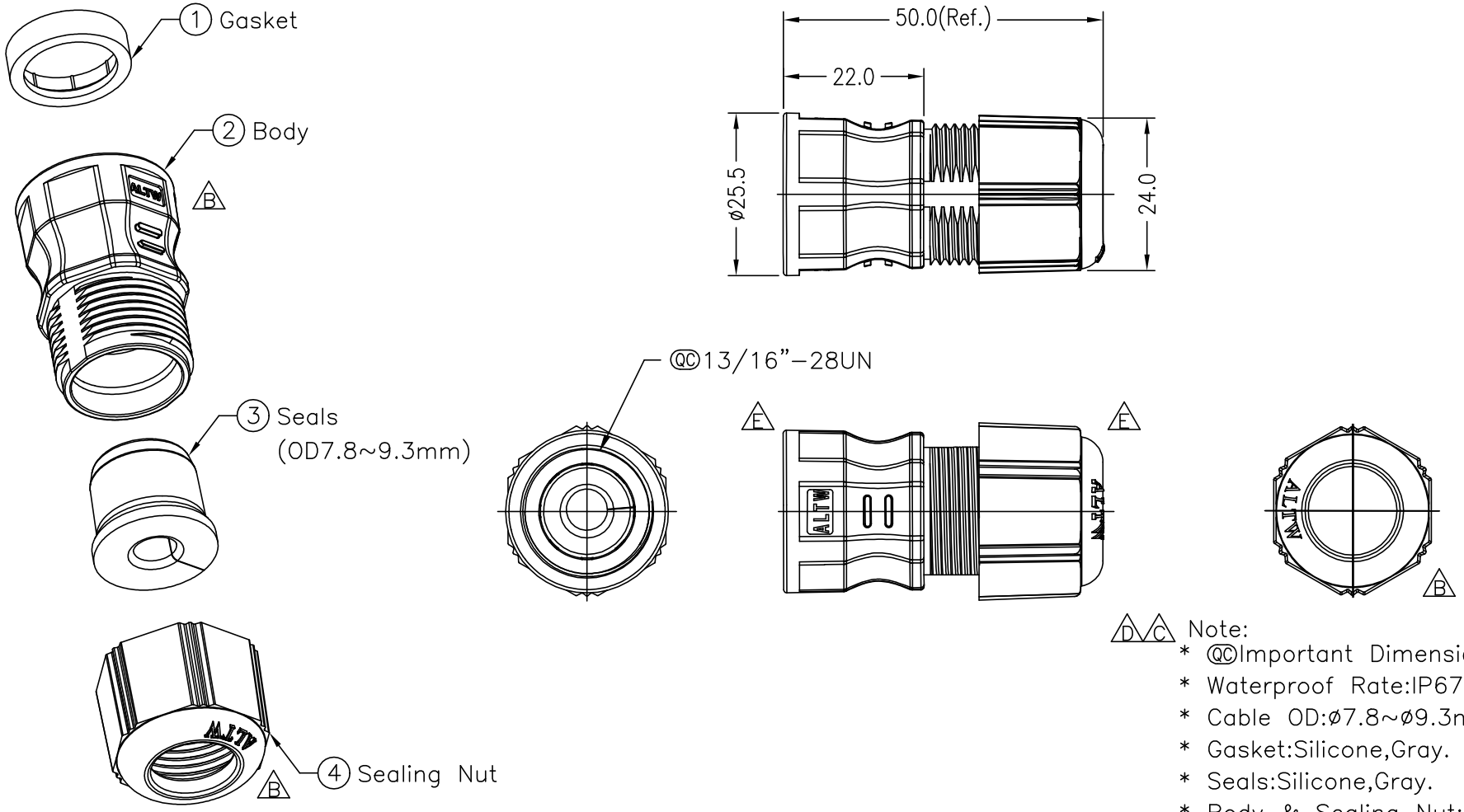

D C Note:

* QC Important Dimension.
* Waterproof Rate:IP67.
* Cable OD:ø7.8~ø9.3mm.
* Gasket:Silicone,Gray.
* Seals:Silicone,Gray.
* Body & Sealing Nut:ZDC-3,Silver.
* 4 零件只需鎖 2~3 牙

UNIT:mm	TITLE: 13/16"-28UN Ass'y Metal (After Plug In)OD 7.8~9.3mm	**Amphenol LTW** 安費諾亮泰企業股份有限公司	ITEM NO: CSG-CSP005	DRAWN BY: Jeff	DATE: 2018/12/28
TOLERANCE: ±0.5mm	SCALE: Free / SHEET: 1 OF 1		DWG NO: CSG-CSP005	CHECKED BY: Neo	DATE: 2018/12/28
	REV.: E / SIZE: A4 / QC :Inspection Item		CUSTOMER: ALTW	APPROVED BY: Max	DATE: 2018/12/28

THIS DOCUMENT IS SUBJECT TO CHANGE WITHOUT NOTICE. IT IS CONFIDENTIAL AND A PROPERTY OF Amphenol LTW. DISCLOSURE TO THIRD PARTY HAS TO BE AUTHORIZED BY Amphenol LTW.