REV.	ECN NO.	DATE	SIGN	DESCRIPTION
H	C210593	2021/04/15	Ruru	H X4
I	C221879	2022/12/19	Ruru	I X1
J	C231033	2023/08/07	Ruru	J X1

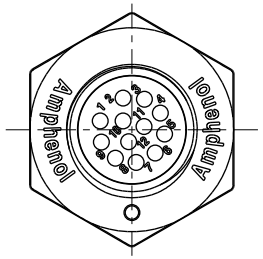

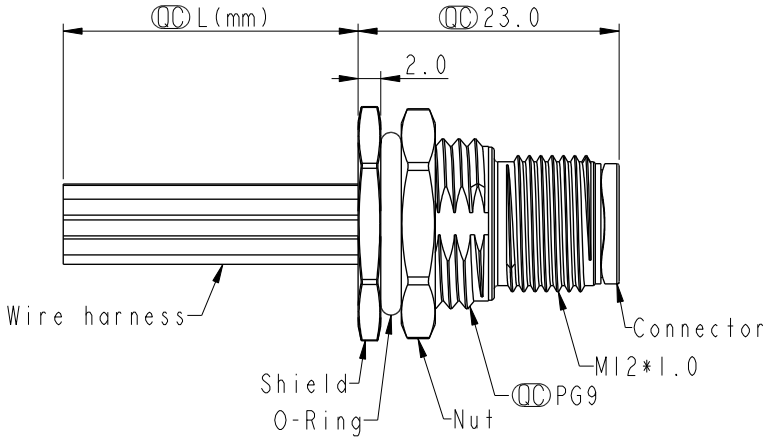

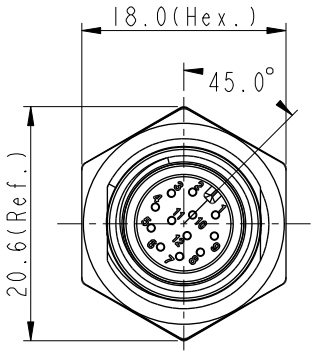

Note: C D F G H
* RoHS Compliant
* QC Important dimension
I * Waterproof rate: IP68, unmated 1m/24h
J IP69K, mated
* Connector
  Housing: Thermoplastic, Black
  Pin: Copper alloy, Gold plated
* Shield: Metal
* Nut: Metal
* O-Ring: Rubber, Black
* Wire harness: UL1061
* For panel thickness max: 4.5mm
* O-Ring and nut are assembled on connectors
* Wire harness tolerance: 100mm: ±10mm
  100mm < L ≦ 300mm: ±15mm
  300mm < L ≦ 1000mm: ±20mm
  1000mm < L ≦ 1500mm: ±50mm

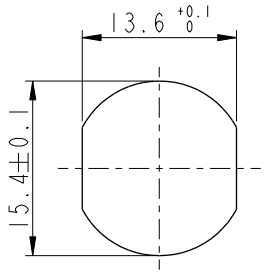

Recommended
Panel Cut-Out

UNIT: mm

TOLERANCE
.X ±0.25
.XX ±0.1
.XXX ±0.05
ANGLES ±1°

TITLE: N SEN, M12 A, SCREW RECEPTACLE, M, M, SOLDER H

SCALE: 1:1 | SIZE: A4 | SHEET 1 OF 2

REV. J | WC-REV. A.5 | QC: Inspection item

Amphenol LTW
安費諾亮泰企業股份有限公司

ITEM NO	DRAWN BY: Ruru	DATE: 2019-09-19
DWG NO: F M12A-XXPMMS-SF8BXX	CHECKED BY: Rita	DATE: 2019-09-19
CUSTOMER: ALTW	APPROVED BY: Max	DATE: 2019-09-19

W10814-03-[redacted]01A2

THIS DOCUMENT IS SUBJECT TO CHANGE WITHOUT NOTICE. IT IS CONFIDENTIAL AND A PROPERTY OF Amphenol LTW. DISCLOSURE TO THIRD PARTY HAS TO BE AUTHORIZED BY Amphenol LTW.

Contacts	AWG	Item No.
12P	26	MI2A-12PMMS-SF8BXX
10P		MI2A-10PMMS-SF8BXX
8P	24	MI2A-08PMMS-SF8BXX
6P		MI2A-06PMMS-SF8BXX

C

D F H

MI2A-XXPMMS-SF8BXX

XX: No. Of Pin

10:100mm
15:150mm
20:200mm
∫
95:950mm
Cable Pitch Unit=50mm

A0:1000mm
∫
A5:1500mm
Cable Pitch Unit=100mm
Wire Length (L):150~1500 mm

Pin #	Wire	
8	--	
7	Blue	藍
6	Pink	粉
5	-	
4	Yellow	黃
3	Green	綠
2	Brown	棕
1	White	白

Pin #	Wire	
8	Red	紅
7	Blue	藍
6	Pink	粉
5	Gray	灰
4	Yellow	黃
3	Green	綠
2	Brown	棕
1	White	白

Pin #	Wire	
12	--	
11	--	
10	Violet	紫
9	Black	黑
8	Red	紅
7	Blue	藍
6	Pink	粉
5	Gray	灰
4	Yellow	黃
3	Green	綠
2	Brown	棕
1	White	白

Pin #	Wire	
12	Red/Blue	紅/藍
11	Gray/Pink	灰/粉
10	Violet	紫
9	Black	黑
8	Red	紅
7	Blue	藍
6	Pink	粉
5	Gray	灰
4	Yellow	黃
3	Green	綠
2	Brown	棕
1	White	白

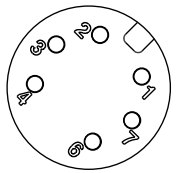
6P

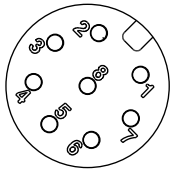
8P

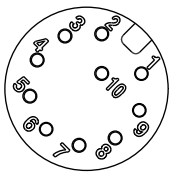
10P

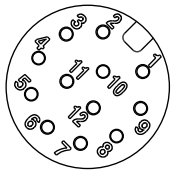
12P

UNIT:mm

TOLERANCE
.X ±0.25
.XX ±0.1
.XXX ±0.05
ANGLES ±1°

TITLE: N SEN, MI2 A, SCREW RECEPTACLE, M, M, SOLDER (H)

SCALE: 1:1 | SIZE: A4 | SHEET 2 OF 2
REV. J | WC-REV. A.5 | (QC):Inspection item

Amphenol LTW
安費諾亮泰企業股份有限公司

ITEM NO	DRAWN BY: Ruru	DATE: 2019-09-19
DWG NO: (F) MI2A-XXPMMS-SF8BXX	CHECKED BY: Rita	DATE: 2019-09-19
CUSTOMER: ALTW	APPROVED BY: Max	DATE: 2019-09-19

W10814-03-[illegible]01A2

THIS DOCUMENT IS SUBJECT TO CHANGE WITHOUT NOTICE. IT IS CONFIDENTIAL AND A PROPERTY OF Amphenol LTW. DISCLOSURE TO THIRD PARTY HAS TO BE AUTHORIZED BY Amphenol LTW.