REV.	ECN NO.	DATE	SIGN	DESCRIPTION

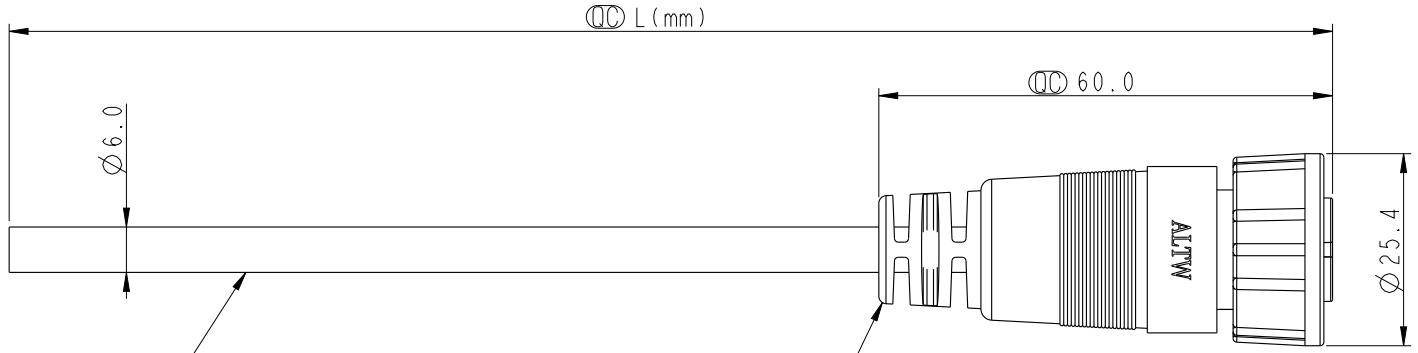

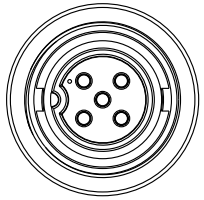

Conn.

ALTW DCC. DEPT. CONFIDENTIAL 2013.12.24 ISSUED

ALTW CONFIDENTIAL 2013-11-01 R&D DEPT.

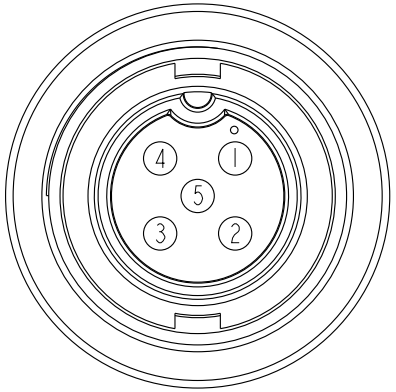

Pin Assignments
Front View

Conn.	Wire Color	
5	Green	綠
4	White	白
3	Black	黑
2	Blue	藍
1	Brown	棕

Pin Out

ICB-05AFMM-SL7AXX

XX :01~99Meters
01 :01Meter
02 :02Meters
:
:
99 :99Meters

Cable Length(L):01~99Meters

Note:
* QC Important Dimension To Check.
* Waterproof Rate: IP67
* Housing: Nylon+GF, Black.
* Male Pin: Copper Alloy, Gold Plated.
* Screw Nut: Nylon+GF, Black.
* O-Ring: Silicon, Gray
* Cable: UL2464 20AWG*5C+D+AI/My PVC Jacket UV Resistant, OD=6.0, Black.
* Cable Length Tolerance: 01M:40mm
02M~05M:±60mm
06M~10M:±100mm
11M~30M:±200mm
31M~99M:±500mm

UNIT:mm

TOLERANCE ±0.5

TITLE: MIDDLE CNC PIN CABLE SCREW 5P F CONN M PIN

SCALE 1:1 | SIZE A4 | SHEET 1 OF 1

REV. A | WC-REV. A.2 | QC:Inspection item

Amphenol LTW
安費諾亮泰企業股份有限公司

ITEM NO	DRAWN BY	DATE
	Tony_leng	2013-11-01
DWG NO: ICB-05AFMM-SL7AXX	CHECKED BY: Ruru	DATE: 2013-11-01
CUSTOMER: ALTW	APPROVED BY: Jerry	DATE: 2013-11-01

FMW10702-01-02A1

THIS DOCUMENT IS SUBJECT TO CHANGE WITHOUT NOTICE. IT IS CONFIDENTIAL AND A PROPERTY OF Amphenol LTW. DISCLOSURE TO THIRD PARTY HAS TO BE AUTHORIZED BY Amphenol LTW.