REV.	ECN NO.	DATE	SIGN	DESCRIPTION

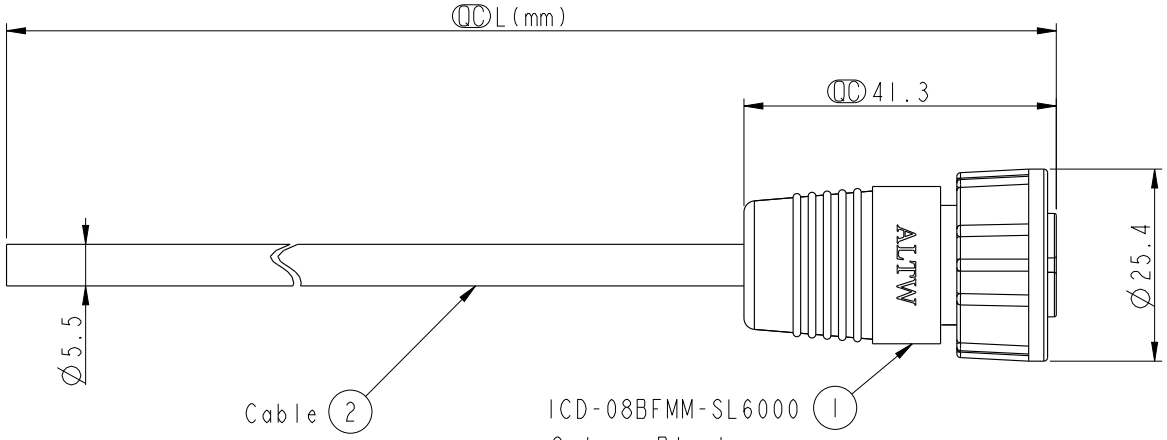

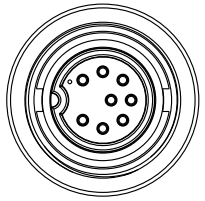

Conn.

ALTW DCC. DEPT. CONFIDENTIAL 2014.01.02 ISSUED

ALTW CONFIDENTIAL 2013-11-29 R&D DEPT.

ICD-08BFMM-SL6A XX

XX: 01~99Meters
01: 01Meter
02: 02Meters
:
:
XX: 99Meters
Cable Length(L): 01~99Meters

Note:
* QC Important Dimension To Check.
* Waterproof Rate: IP66
* Housing: Nylon+GF,Black.
* Male Pin: Copper Alloy, Gold Plated.
* Screw Nut: Nylon+GF. Black
* O-Ring: Silicon, Gary.
* Cable: UL2464 24AWG*8C+Drain+Al/My PVC Jacket UV Resistant, OD=5.5, Black.
* Cable Length Tolerance: 01M: 40mm
  02M~05M: ±60mm
  06M~10M: ±100mm
  11M~30M: ±200mm
  31M~99M: ±500mm

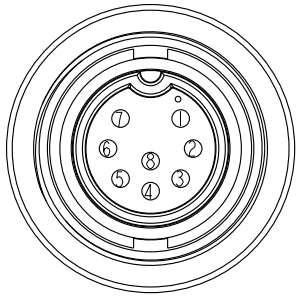

Pin Assignments
Front View

Conn. Pin Out	Wire Color	
8	Green	綠
7	Yellow	黃
6	Orange	橙
5	Red	紅
4	Blue	藍
3	White	白
2	Brown	棕
1	Black	黑

UNIT: mm

TOLERANCE ±0.5

TITLE: MIDDLE CNC PIN CABLE SCREW 8P F CONN M PIN

SCALE 1:1 | SIZE A4 | SHEET 1 OF 1

REV. A | WC-REV. A.2 | QC: Inspection item

Amphenol LTW
安費諾亮泰企業股份有限公司

ITEM NO	DRAWN BY: Lin_rensong	DATE: 2013-11-29
DWG NO: ICD-08BFMM-SL6AXX	CHECKED BY: Tony_leng	DATE: 2013-11-29
CUSTOMER: ALTW	APPROVED BY: Victor	DATE: 2013-11-29

FMW10702-01-02A1

THIS DOCUMENT IS SUBJECT TO CHANGE WITHOUT NOTICE. IT IS CONFIDENTIAL AND A PROPERTY OF Amphenol LTW. DISCLOSURE TO THIRD PARTY HAS TO BE AUTHORIZED BY Amphenol LTW.