REV.	ECN NO.	DATE	SIGN	DESCRIPTION

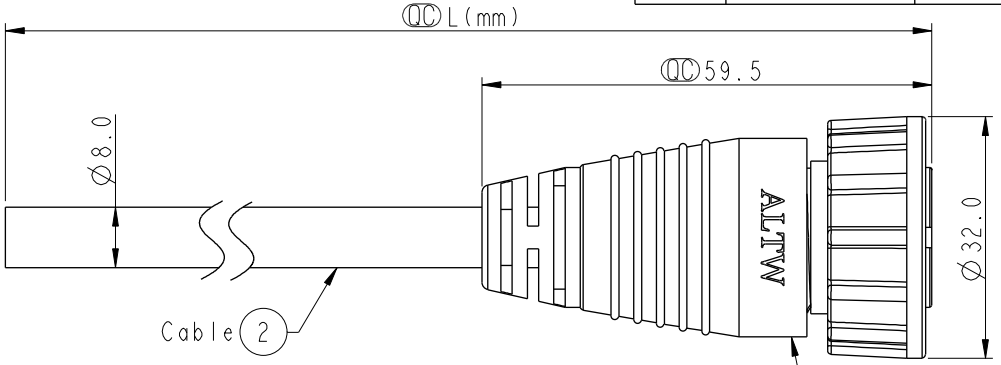

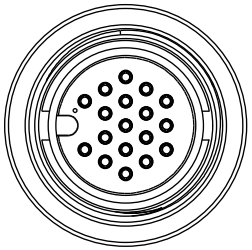

Conn.

ALTW
CONFIDENTIAL
2013-12-27
R&D DEPT.

ALTW
DCC. DEPT.
CONFIDENTIAL
2014.01.03
ISSUED

Conn.	Wire Color	
18	Blue/White	藍/白
17	Green/White	綠/白
16	Orange/White	橘/白
15	Red/White	紅/白
14	Brown/White	棕/白
13	Black/White	黑/白
12	Light Green	淺綠
11	Purple	紫
10	Orange	橘
9	Black	黑
8	Red	紅
7	Pink	粉紅
6	Gray	灰
5	Yellow	黃
4	Green	綠
3	White	白
2	Blue	藍
1	Brown	棕
Pin Out		

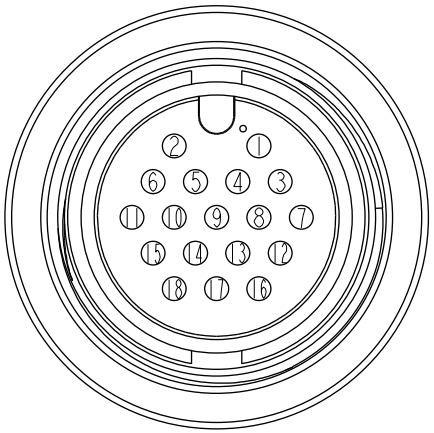

Pin Assignments
Front View

IDD-18AFFM-SL7AXX

XX :01~99Meters
01 :01Meter
02 :02Meters
:
:
99 :99Meters

Cable Length(L):01~99Meters

Note:
* QC Important Dimension To Check.
* Waterproof Rate: IP67
* Housing: Nylon+GF, Black.
* Female Pin: Copper Alloy, Gold Plated.
* Screw Nut: Nylon+GF, Black.
* O-Ring: Silicone, Gray.
* Cable: UL2464 24AWG*18C+D+AL/My, PVC Jacket, UV Resistant, OD=8.0mm, Black.
* Cable Length Tolerance: 01M:±40mm
  02M~05M:±60mm
  06M~10M:±100mm
  11M~30M:±200mm
  31M~99M:±500mm

UNIT:mm

TOLERANCE
±0.5 mm

TITLE: Large CNC Pin Cable Screw 18Pin F Conn F Pin

SCALE	SIZE	SHEET
1:1	A4	1 OF 1
REV. A	WC-REV. A.1	QC:Inspection item

Amphenol LTW
安費諾亮泰企業股份有限公司

ITEM NO	DRAWN BY	DATE
	Vicky	2013-12-27
DWG NO: IDD-18AFFM-SL7AXX	CHECKED BY: Ruru	DATE: 2013-12-27
CUSTOMER: ALTW	APPROVED BY: Victor	DATE: 2013-12-27

FMW10702-01-02A1

THIS DOCUMENT IS SUBJECT TO CHANGE WITHOUT NOTICE. IT IS CONFIDENTIAL AND A PROPERTY OF Amphenol LTW. DISCLOSURE TO THIRD PARTY HAS TO BE AUTHORIZED BY Amphenol LTW.